VEHICULAR PARTS 18

Rubber Splash Guards 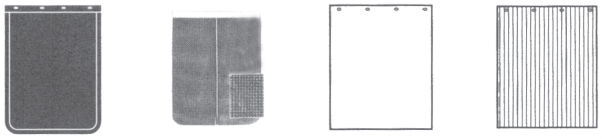 Pg. 108

Miscellaneous Splash Guards 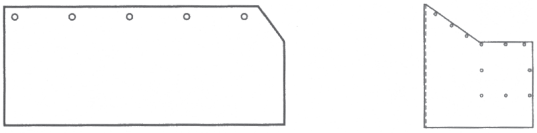 Pg. 110

Wheel Chocks 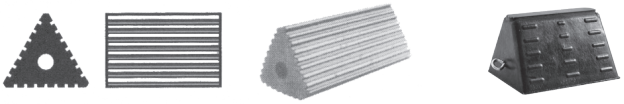 Pg. 111

Rubber Hooks 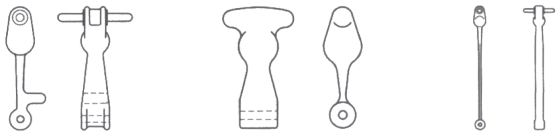 Pg. 112

Metal Hardware 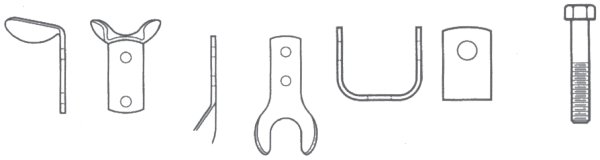 Pg. 113

Miscellaneous Pg. 114

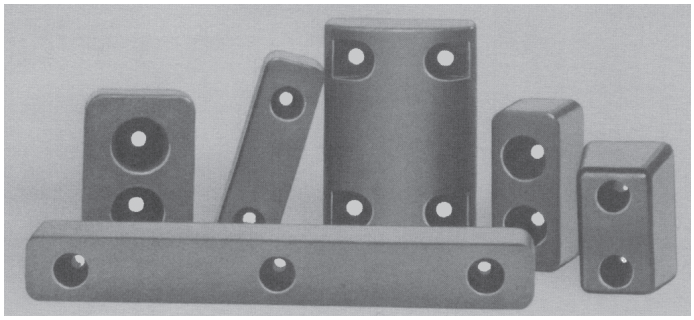

See pages 21 - 25 for Truck & Trailer Bumpers

RUBBER SPLASH GUARDS

LONGWOOD

ILLUSTRATIONS BELOW NOT TO SCALE

PLAIN OR PERSONALIZED

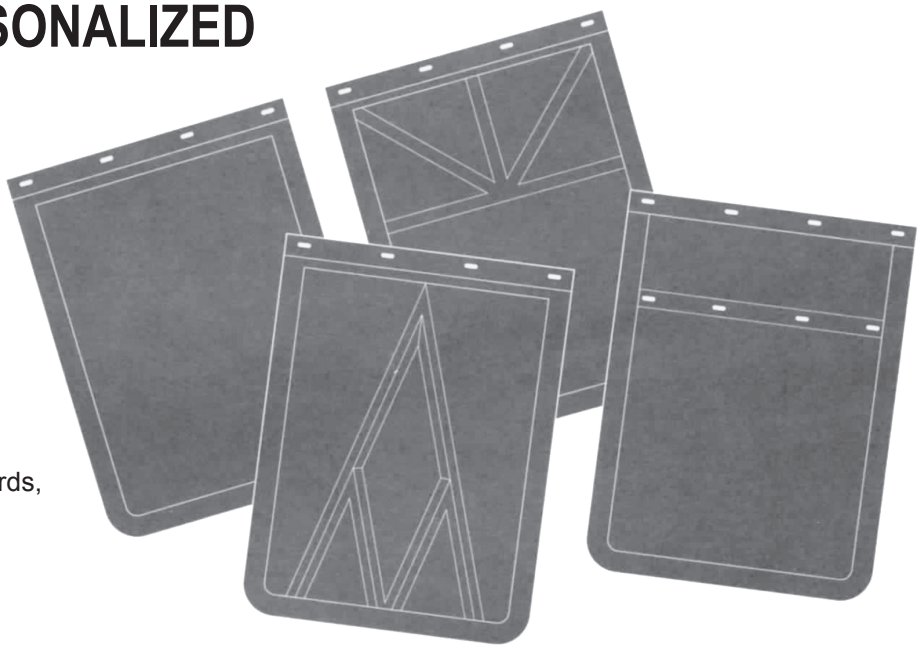

Also Available:
White polyethylene splash guards, plain or personalized

Durable 5/16″ — Black Only		
Part #	**Size (in.)**	**Approx. Wt./Pair**
18-4582	24 x 24	11 lbs
18-4583	24 x 30	13.5 lbs
18-4585	24 x 36	16.5 lbs
Anti-Spray ½″ — Black Rubber		
18-4594	24 x 24	14.5 lbs
18-4595	24 x 30	17 lbs
18-4596	24 x 36	20 lbs

ANTI-SPRAY

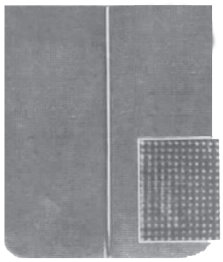

Miscellaneous		
Part #	**Size (in.)**	**Approx. Wt./Pair**
18-1140	20 x 25	6 lbs
18-1141	24 x 18	9 lbs
18-1149	24 x 20	10.5 lbs
18-1502	24 x 24	11 lbs
18-1504	24 x 30	13.5 lbs
18-2104	24 x 30	13.5 lbs
18-2105	24 x 36	16.5 lbs
18-2106	24 x 36	16.5 lbs
18-2107	24 x 30/36	17.5 lbs
18-3410	24 x 24	11 lbs
18-4010	24 x 30	17 lbs

ILLUSTRATIONS BELOW NOT TO SCALE

Rubber Flaps (Black Only)

Raintrapper

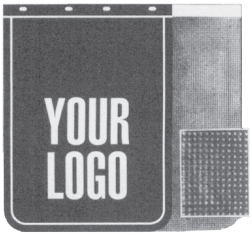

- Anti-sail
- Anti-spray
- Reinforced Rubber
- The most durable flap on the market
- Part # 67-4090

Standard

- 5/16″ Thick
- Reinforced mounting holes
- Reinforced rubber
- Resists waving, cracking, and tearing
- Part # 67-4584

Rubberized Poly Flaps (Black or White)

Polyguard Plus

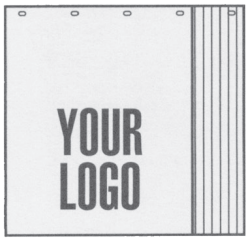

- Anti-sail
- Anti-spray
- Stays flexible in the coldest conditions
- Resists breaking or cracking
- Part # PGP2430

Polyguard

- Anti-breaking compound
- Brightest white on the market
- Stays flexible in the coldest conditions
- Part # PG2430

- We can reproduce virtually any decal or logo.
- If you do not have a logo our in-house artist will design one for you.

MISCELLANEOUS SPLASH GUARDS

LONGWOOD

ILLUSTRATIONS BELOW NOT TO SCALE

18-3980R

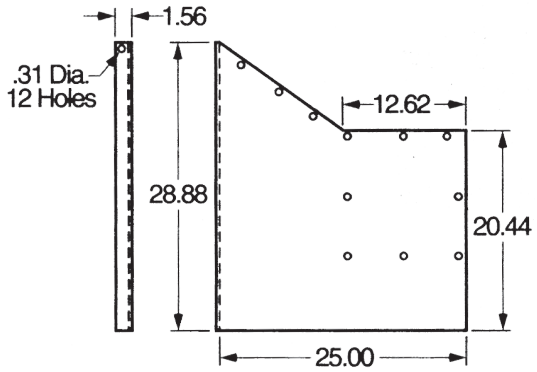

18-4139R

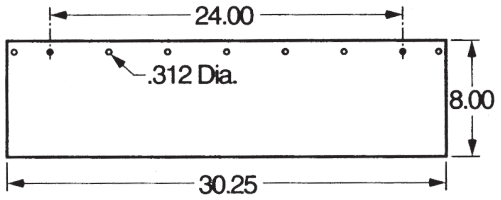

18-3001R

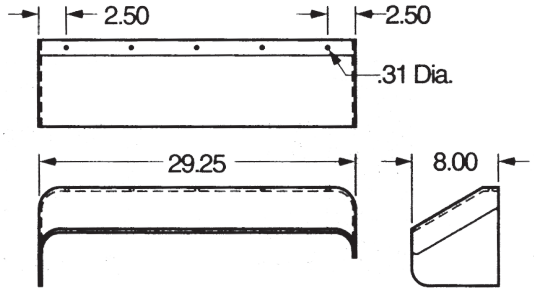

18-4487R

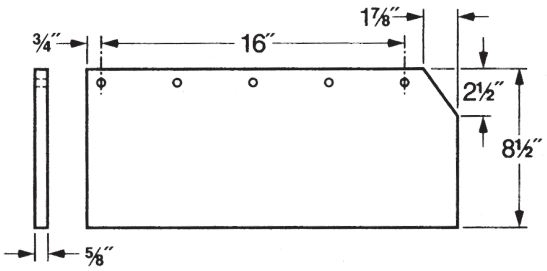

18-6046R

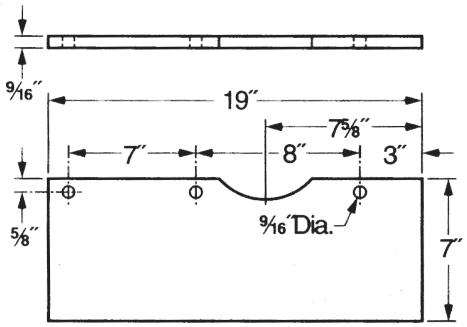

18-4488R

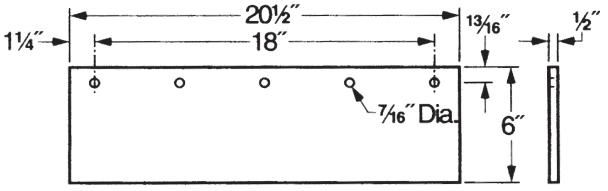

Call 1-800-829-7231 for sales assistance

ILLUSTRATIONS BELOW NOT TO SCALE

18-56
Extruded Chock

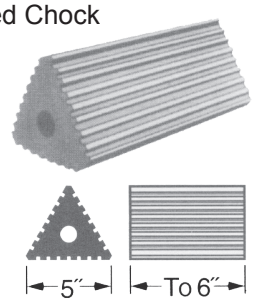

AIRCRAFT CHOCKS

For use with medium-duty trucks, aircraft, and large pipe.

Weight: 9 lbs./ft. (black)
7 ½ lbs./ft. (yellow)

Heavy-Duty Truck & Trailer Chocks

Longwood's heavy-duty molded wheel chocks are a "must have" for safety, durability, and economy.

OSHA requires wheel chocks under the rear wheels of highway semi's while being loaded or unloaded with powered lift trucks. The design and composition of our chocks minimizes the possibility of injury from unsecured trailers and positively prevents vehicle movement. Our chocks are designed to grip even under bad weather conditions.

Economy and Durability

Once you buy Longwood wheel chocks, you can't get rid of them. They're yours for a long, long time. Our chocks are made of Tensile-Tex, 100% fiber-reinforced rubber, so they'll probably outlast your trucks. They can't get lost, because the eyebolt ensures that they'll stay put right on the dock or on the truck. If they get run over, they bounce right back, and they can't ruin your truck's tires because of their hard rubber composition.

These chocks resist abrasion, sun, oil, and ozone. They can withstand extremes of cold, heat, and weather, too. They're almost forever. Give them a try and you'll see what we mean.

Heavy-Duty Truck & Trailer Chocks

Part #	Size	Wt. Each
18-1047	5 ⅝H x 9 ½W x 7 ¾L—Pyramid	7 - 8 lbs.

18-1047

Call 1-800-829-7231
for other sizes and
configurations

RUBBER HOOKS

LONGWOOD

ILLUSTRATIONS BELOW NOT TO SCALE

Truck Hood, Battery Box, Hatch Cover Fasteners

Snug-fit fastening with never a squeak! Neat, trim appearance. Special formula high-impact resin handles and quality rubber body are impervious to weather, chemicals, and dirt. All Longwood rubber hood hooks have molded polycarbonate resin handles.

Flexible, quiet Longwood hood hooks won't rust, won't corrode. Require no lubrication, yet provide snug, positive fastening and unfastening with smooth, effortless ease. Select pull force from charts.

18-7001

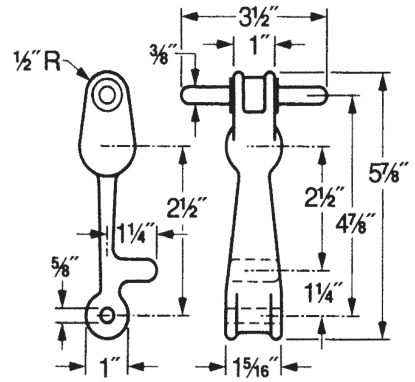

With anti-rattle nub. Our standard model. Especially suited to fastening truck hoods and for heavy-duty applications.

18-7002

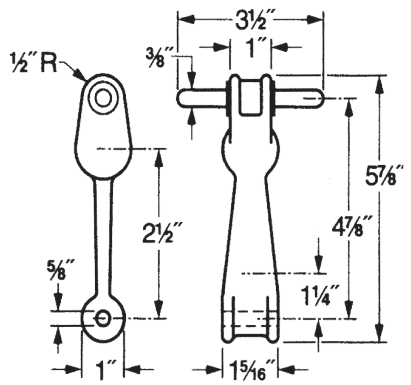

Without anti-rattle nub.

18-7003

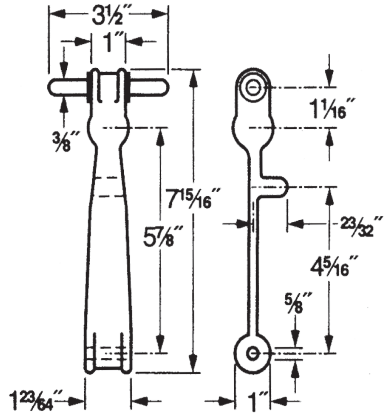

With anti-rattle nub.

18-7004

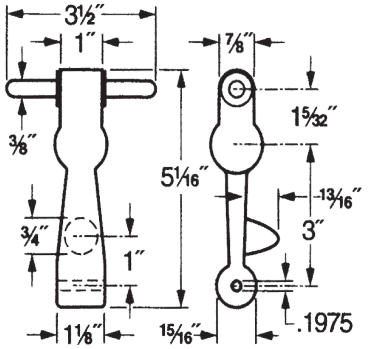

With anti-rattle nub. Our compact model. Excellent size for securely fastening battery box covers in limited space

18-7005

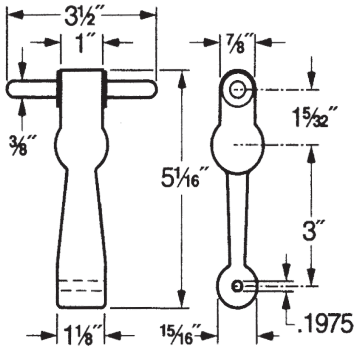

Without anti-rattle nub.

18-7006

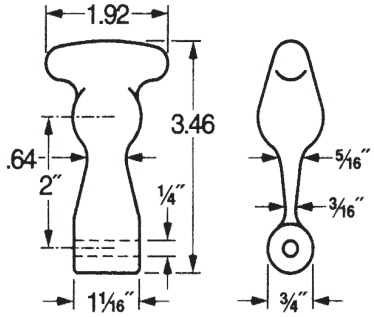

Our smallest model. Ideal size for small hoods and access panels.

18-7007

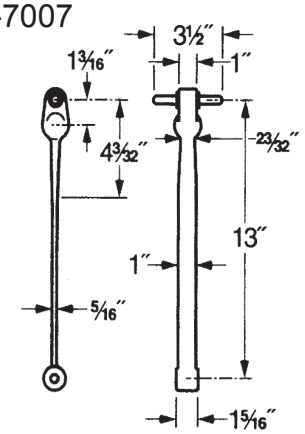

Our largest model. Long reach for extra stretch and around-corner fastening.

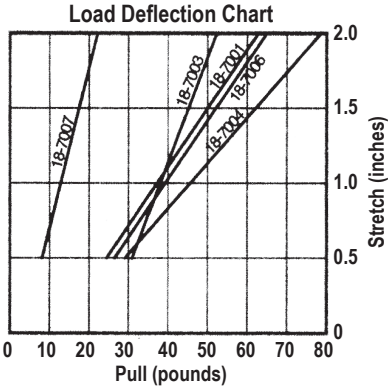

Determine stretch or holding force required from load deflection chart and add zero-stretch dimension A or B to locate hood bracket in relation to anchor bracket.

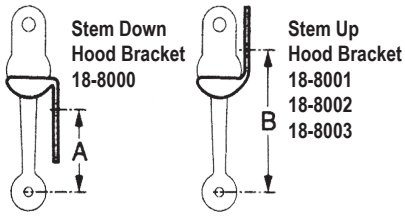

Hood Hook	A 18-8000	B 18-8001	B 18-8002	B 18-8003
18-7001	2 5/8	3 7/8	3 7/8	6 11/16
18-7002	2 5/8	3 7/8	3 7/8	6 11/16
18-7003	4 3/4	6 1/16	6 1/16	8 5/8
18-7004	2	3 3/16	3 3/16	6
18-7005	2	3 3/16	3 3/16	6
18-7006	1 1/16	2 3/8	2 3/8	4 13/16
18-7007	10 5/8	11 3/4	11 3/4	14 19/32

ILLUSTRATIONS BELOW NOT TO SCALE

...designed especially for Longwood rubber hooks. Precision-made from high-quality steel with a special hot-zinc, bright finish. Attractive appearance, or easily painted in your shop if desired. This heavy-duty hardware accurately fits the Longwood rubber hooks. Also available chrome-plated on special order.

18-8000 Hood Bracket

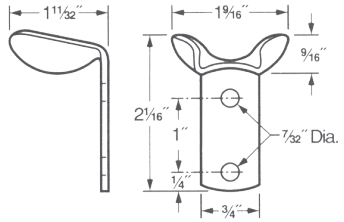

18-8001 Hood Bracket

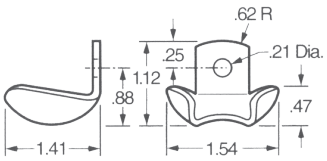

18-8002 Hood Bracket

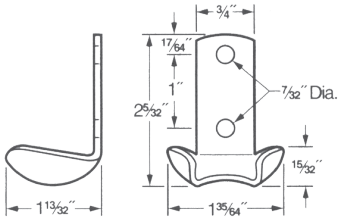

18-8003 Hood Bracket

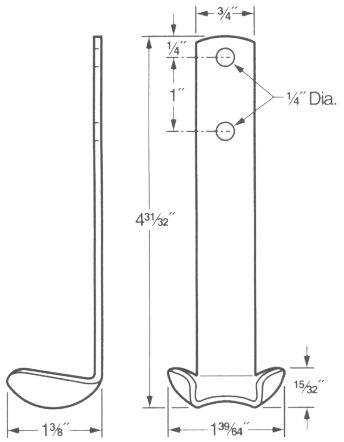

18-8004 Hood Bracket

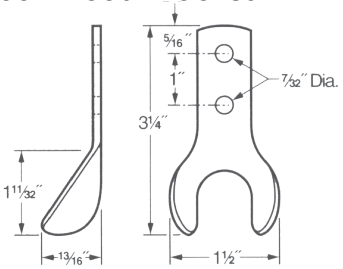

18-8005 Hood Bracket

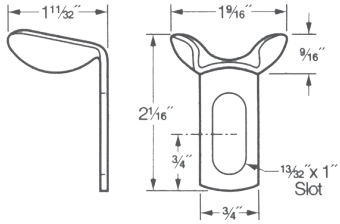

18-8006 Hood Bracket

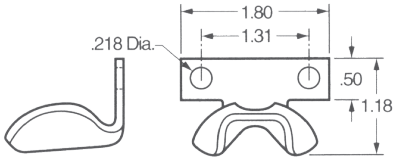

18-8007 Hood Bracket

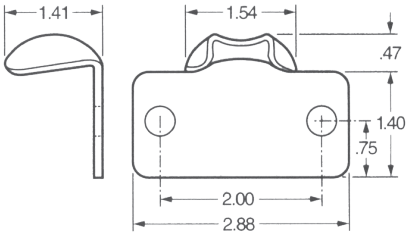

18-8008 Anchor Bracket

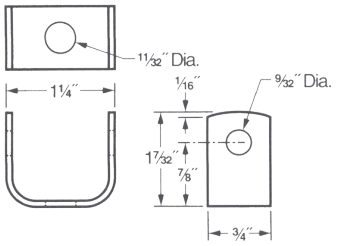

18-8009 Anchor Bracket

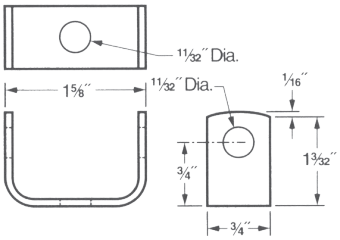

18-8011 Anchor Bracket

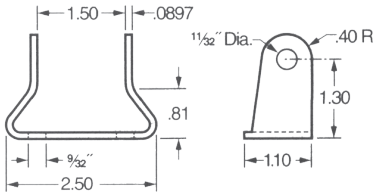

Anchor Bolt

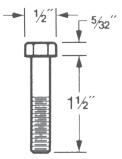

¼ NC x 1 ½ HH cad. pl. bolt w/ self-locking nut. Use with: 18-7004, 18-7005, 18-7006

Anchor Bolt

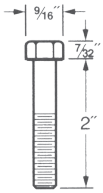

5/16 NF x 2 HH cad. pl. bolt w/ self-locking nut. Use with: 18-7001, 18-7002, 18-7003, 18-7007

18-8012 Anchor Pin

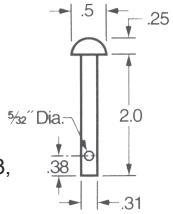

Chrome-plated steel. Use with: 18-001, 18-002, 18-003, 18-007

18-8010 Anchor Pin

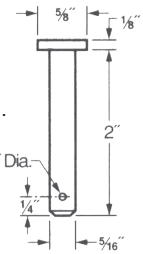

Zinc-plated steel. Use with: 18-001, 18-002, 18-003 18-007

MISCELLANEOUS

LONGWOOD

ILLUSTRATIONS BELOW NOT TO SCALE

18-6654R Pedal Pad

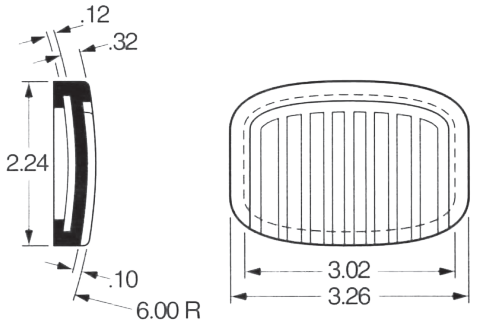

18-6720R Pedal Pad

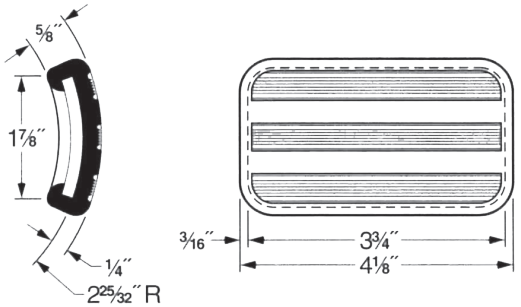

Longwood can custom-mold parts to your specifications.
Fax drawings to 336-272-5619
or call 1-800-829-7231

Longwood offers:
- -Die Cutting
- -Molding
- -Extruding

18-6711R Glad-Hand Seal (TPE)

Double Lip
- -Red
- -Blue
- -Black

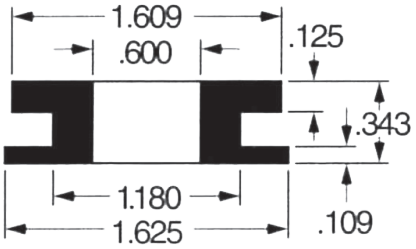

Molded Tarp Straps

Longwood tarp straps have heavy-duty molded ends so hooks will not slip.

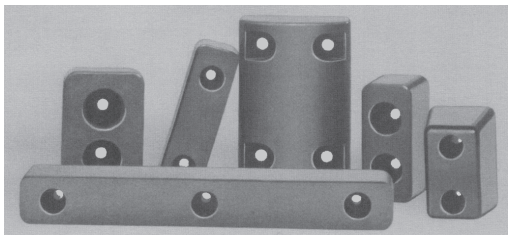

See pages 21-25 for truck & trailer bumpers

Molded Tarp Straps	
Part #	**Rubber Length Unstretched**
18-009	9″
18-015	15″
18-020	20″
18-031	31″
18-041	41″

"S" hooks 2 ½″ long, 50/ea. per box

APPLICATIONS!

FARMING

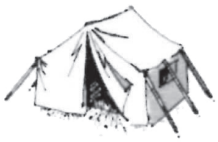

CAMPING

TRUCKING

BOATING

RECREATION VEHICLES